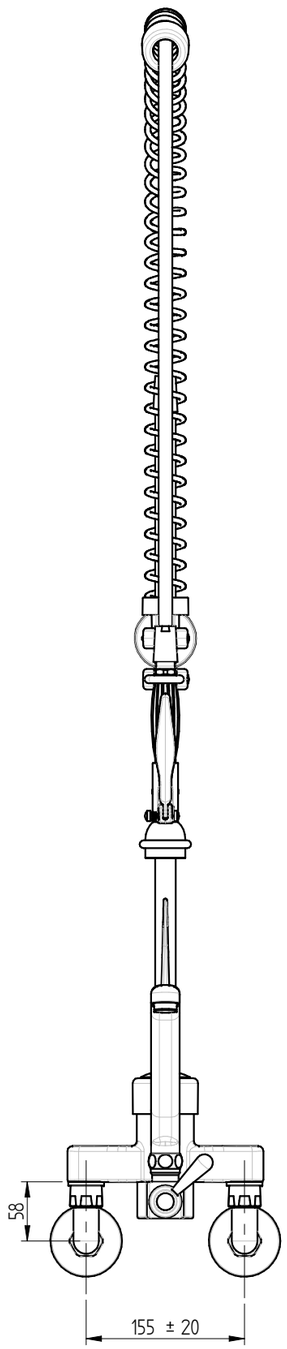

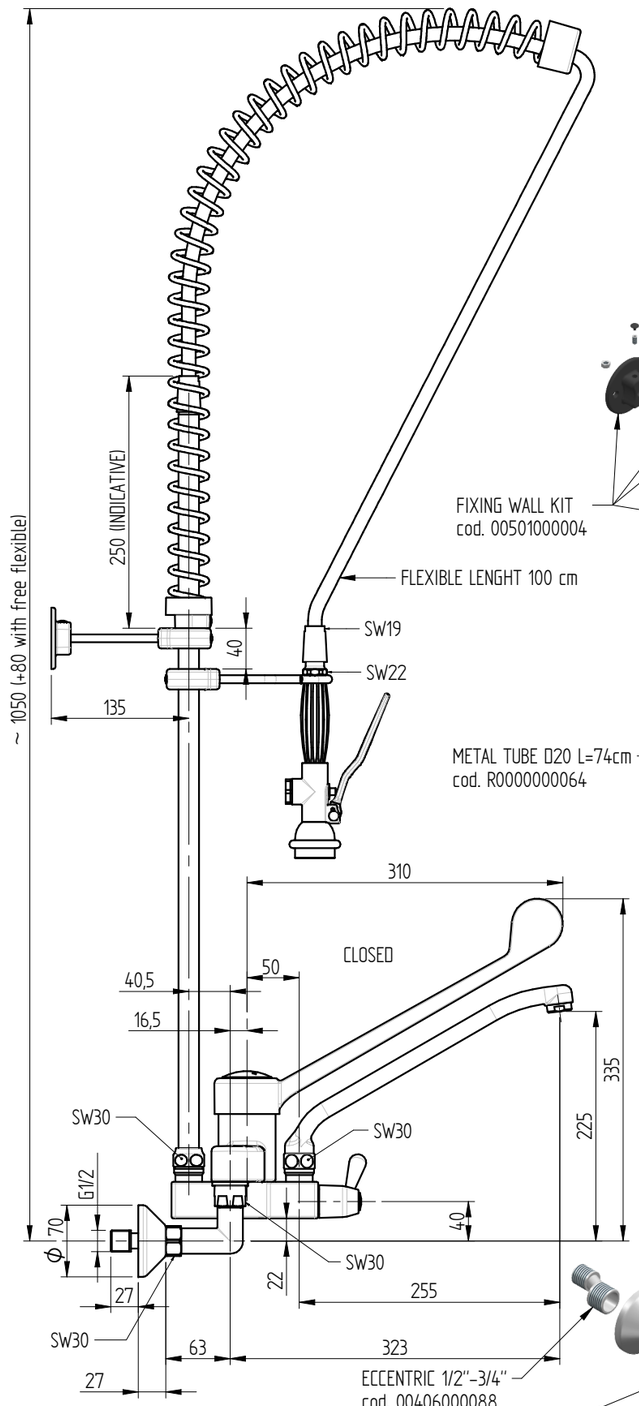

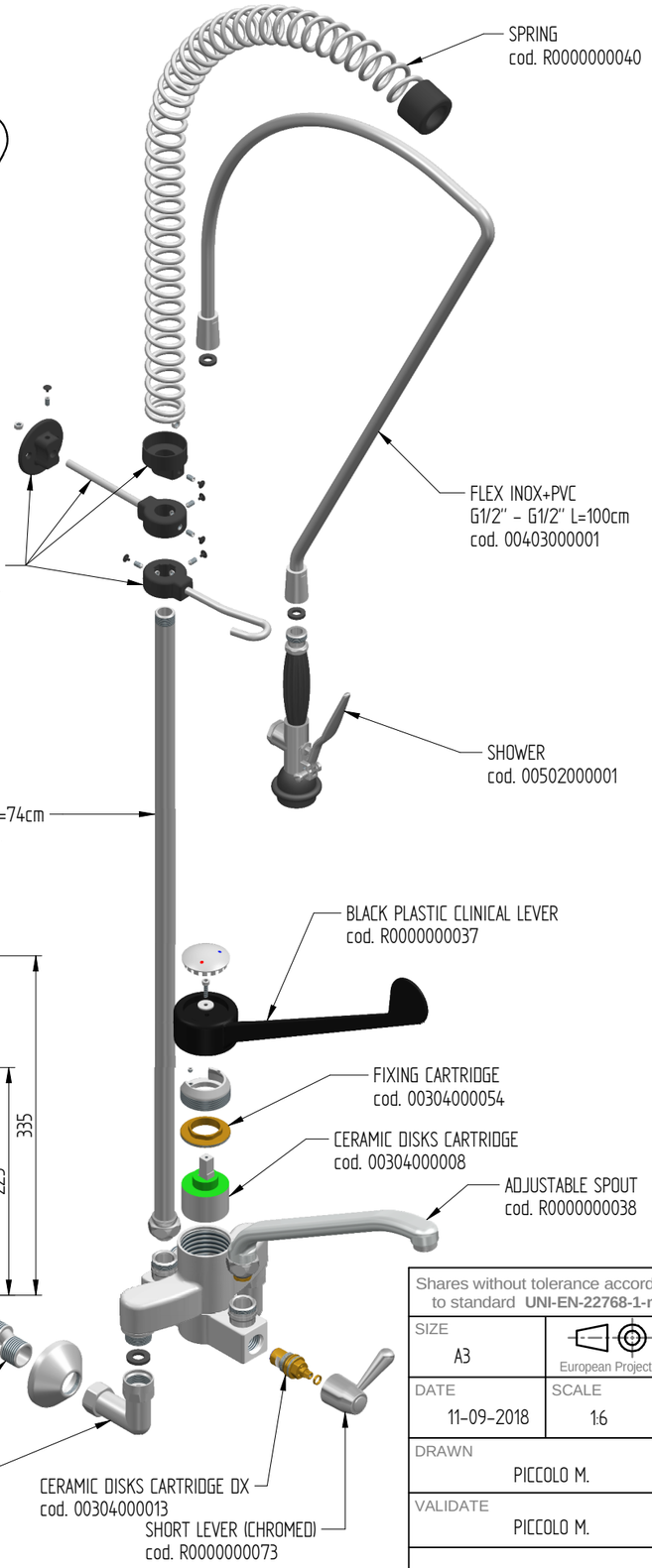

FLOW RATE : 12 L/min at 3,5 BAR only from the shower
14 L/min at 3,5 Bar onlly from the spout
18 L/min at 3,5 BAR when both + spout are open

Shares without tolerance according to standard **UNI-EN-22768-1-m**		DESCRIPTION TWO HOLES PRE-RINSE MIXER UNIT WALL MOUNTED WITH SWINGING SPOUT, PLASTIC (PA6) CLINICAL LEVER AND BASIC SHOWER HAND. 155mm WHEELBASE WITH ±20mm TOLERANCE	CODE R0102020210
SIZE A3	European Projection		WEIGHT 7,05 Kg
DATE 11-09-2018	SCALE 1:6	MONOLITH DESIGN AND TECHNOLOGICAL RESEARCH FOR WATER	
DRAWN PICCOLO M.			
VALIDATE PICCOLO M.		VIA DELL'ARTIGIANO 8/F-8-G , 31050 MONASTIER di TREVISO (TV) tel: 0422 842157 - fax: 0422 708978	

DONE WITH DESIGN CAD - PROHIBITED THE CHANGES MANUAL

Rev. 00