ИЗМЕЛЬЧИТЕЛЬ ЛЬДА APACH AIC1

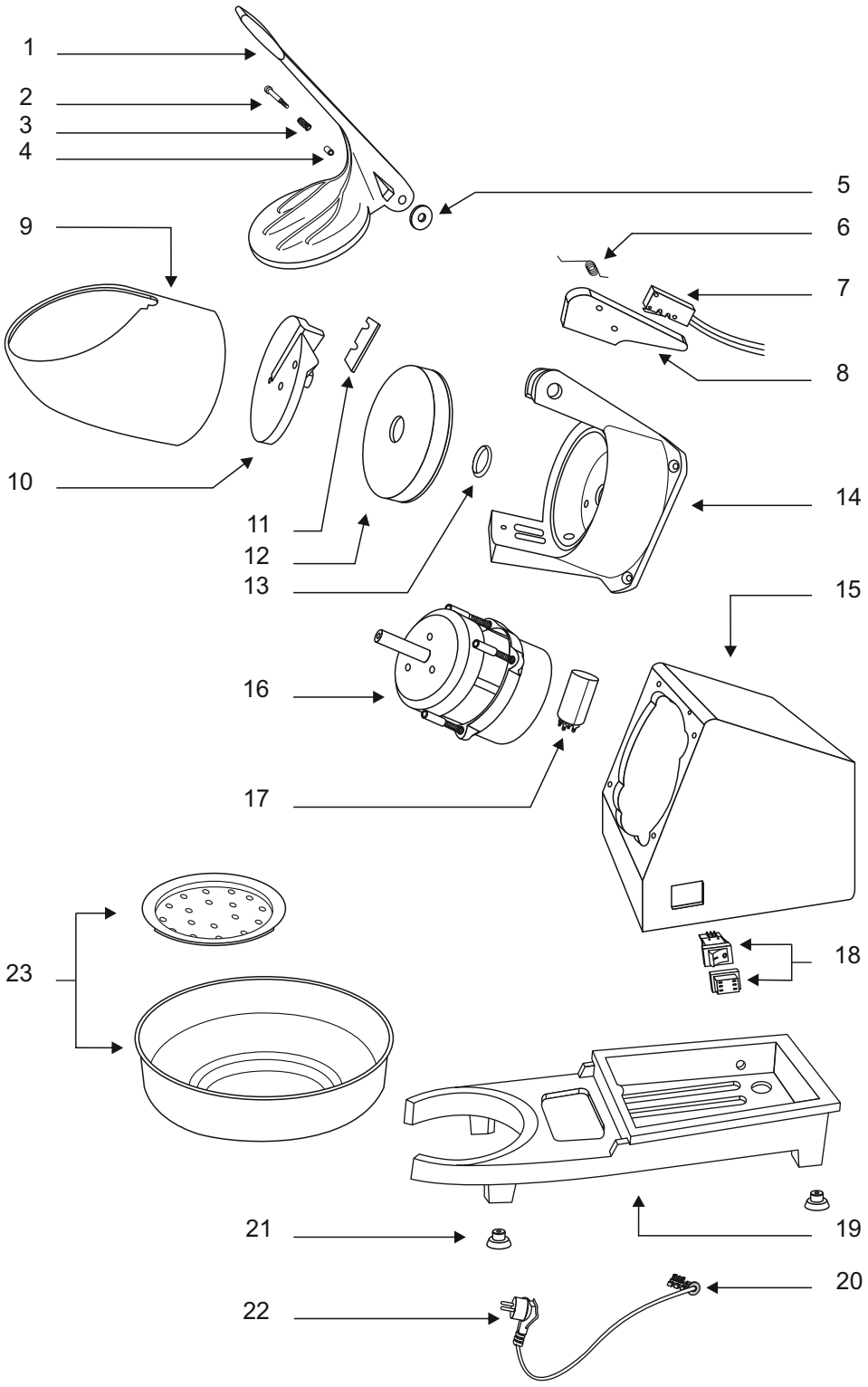

Model
ИЗМЕЛЬЧИТЕЛЬ ЛЬДА APACH AIC1

Evol.	Table	Date
1	1	01/01/2012

	N.	Code	Features
	1	C0003T404	
	2	C0004T814	
	3	C0008XX01	
	4	C00071615	
	5	C0004XX01	
	6	C0008T401	
	7	C00061024	
	8	C0007T401	
	9	C0003T401	
	10	C0003T403	
	11	C0004T406	
	12	C0004T407	
	13	C0007T402	
	14	C0001T406	
	15	C0001T407	
	16	C00061228	230V-50Hz
		C000612281	220V-60Hz
		C000612282	110V-60Hz
	17	C00061107	230V-50/60Hz
		C00061108	110V-60Hz
	18	C00061021	
	19	C0001T411	
	20	C00061612	
	21	C00071622	
	22	C00061517	SHUKO
		C000615171	USA
		C000615172	UK
		C000615173	SWITZERLAND
		C000615174	AUSTRALIA
		C000615175	BRAZIL
	23	C0004T405	