КОФЕМОЛКА APACH ACG4 (Лист 1)

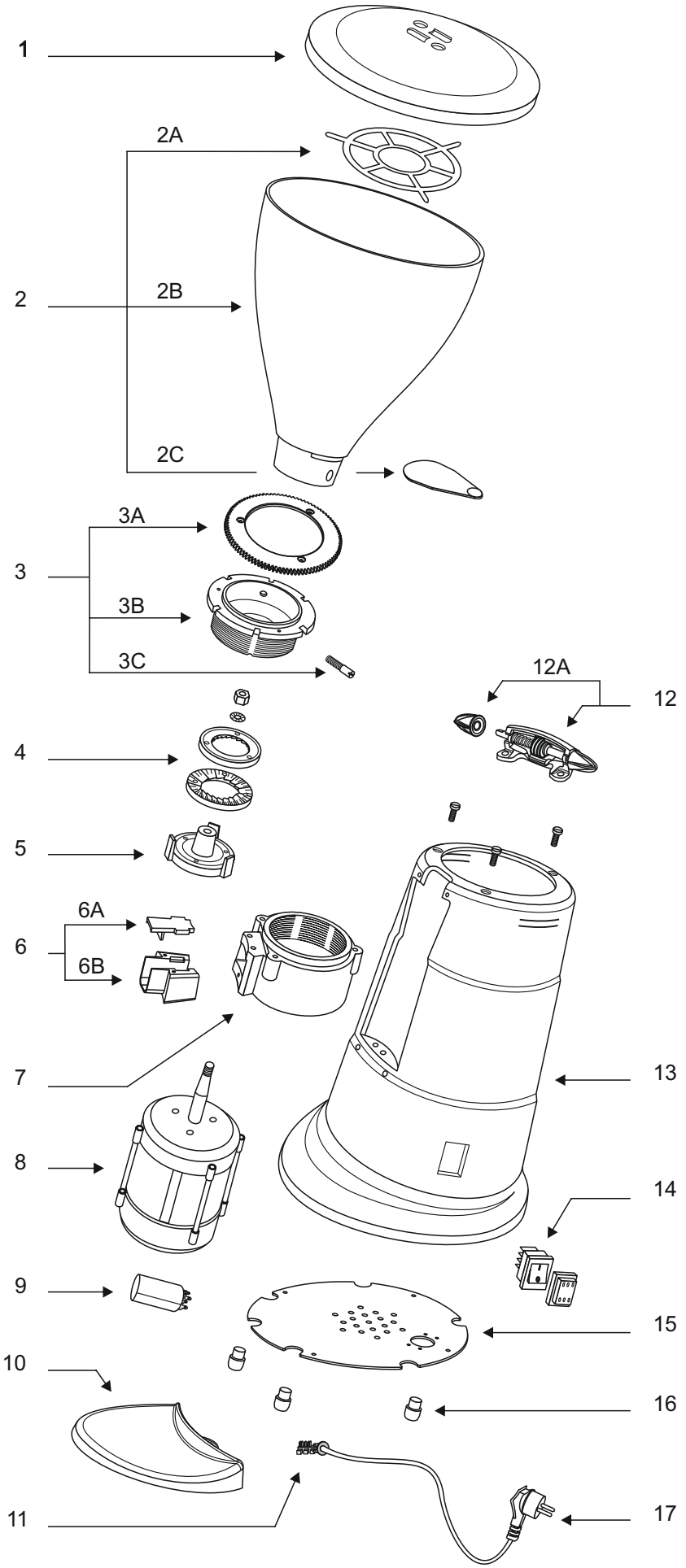

Model
КОФЕМОЛКА APACH ACG4

Evol.	Table	Date
7	1/4	08/03/2019

	N.	Code	Features
	1	C0007M114	
	2	C0007M113	
	2A	C0007M101B	
	2B	C0007M113A	
	2C	C0007M101C	
	3	C212004	
	3A	C0007M162A	
	3B	C212003	
	3C	C0004M139	
	4	C0004M121	
	5	C0002M111	
	6	C2120021	
	6A	C2120021A	
	6B	C2120021B	
	7	C211001	
	8	C00061210	230V - 50Hz
		C000612101	220V - 60Hz
		C000612103	110V - 60Hz
	9	C00061108	230V - 50Hz 16µf
		C00061111	220V - 60Hz 12,5µf
		C00061110	110V - 60Hz 50µf
	10	C00071800	
	11	C00061612	
	12	C00071813	
	12A	C00071650	
	13	C00010103	
	14	C00061021	
	15	C0004M143	
	16	C000716140	
	17	C00061517	SHUKO
		C000615171	USA
		C000615172	UK
		C000615173	SWITZERLAND
		C000615174	AUSTRALIA
		C000615175	BRAZIL

Descriptions	
	Available
	Not available

КОФЕМОЛКА APACH ACG4 (Лист 2)

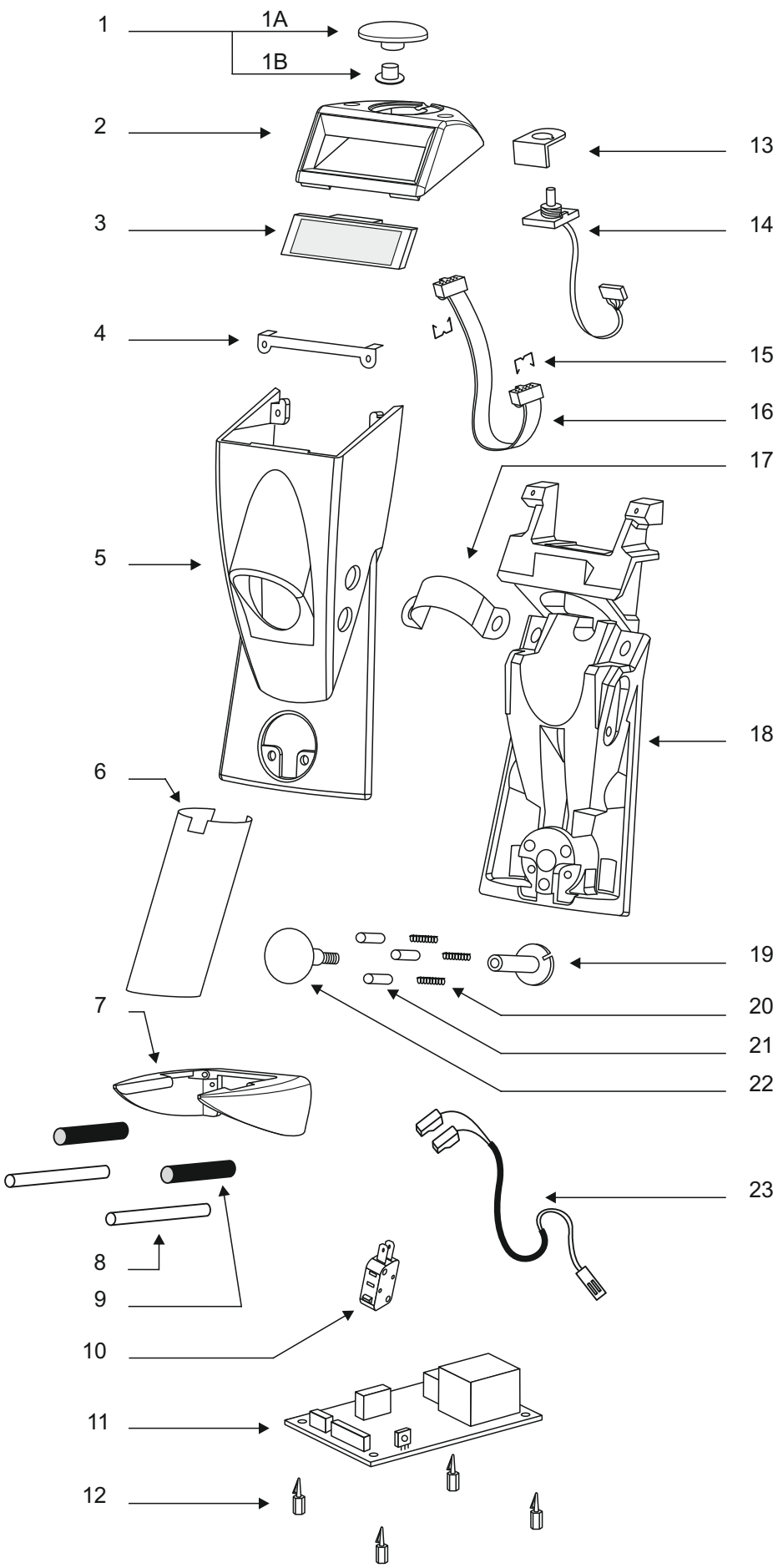

Model
КОФЕМОЛКА APACH ACG4

Evol.	Table	Date
7	2/4	08/03/2019

	N.	Code	Features
	1	C204011	
	1A	C204012	
	1B	C207003	
	2	C217001	
	3	C206009	
	4	C204005	
	5	C207001	
	6	C204007	
	7	C00010105	
	8	C00041330	
	9	C00071801	
	10	C00061030	
	11	C206008	230V - 50/60 Hz
		C2060081	110V - 60Hz
	12	C0007M172	
	13	C207004	
	14	C206012	
	15	C0008M113	
	16	C206010	
	17	C204004	
	18	C202003	
	19	C204017	
	20	C208019	
	21	C204018	
	22	C204016	
	23	C206013	

Descriptions	
	Available
	Not available