No.	Name	Material/Spec	Qty
1	Round food pusher	ABS/≈59.2g	1
2	Square food pusher	ABS/≈120g	1
3	Upper cover	Die-cast aluminum/ADC12/≈405g	1
4	Positioning sleeve	Copper-based powder metallurgy (oil-containing)/Φ16X12 Inner holeΦ6.2	1
5	Hexagonal lock nut M8 (reverse thread)	SUS304/M8 reverse thread with anti-loosening rubber ring	1
6	Stainless steel M8 spring	SUS304/M8 spring	1
7	Stainless steel M8 flat washer	SUS304/Φ8.5XΦ20X1	1
8	Stainless steel countersunk cross machine thread	SUS304/M4X8	4
9	Dicing blade	SUS420/182X38X2.5/50-52HRC	1
10	The main body of the dicing blade	Aluminum/182X38X7	1
11	POM Flat Washer	POM/Φ12XΦ24X1	2
12	Cross recessed countersunk machine thread	SUS304/M5X10	2
13	Dicing knife net	ABS/103X76X10	1
14	Dicing blade bracket	SUS304/238.8X194 T=2	1
15	Dicing drive Positioning sleeve	Copper-based powder metallurgy (oil-containing)/Φ22X19.5 Inner holeΦ12.02	1
16	Sleeve bracket	Die-cast aluminum/ADC12/≈22g	1
17	Dicing drive shaft	SUS420/Φ22X70.5/40-45HRC	1
18	Stainless steel countersunk cross machine thread	SUS304/M4X10	20
19	Slice blade	SUS420/73.5X40X2/50-52HRC	2
20	slice spacers	SUS304/73.2X20.4X1	8
21	Stainless steel slicing disc	SUS304/Φ182X6 T=0.8	1
22	Slicing disc base	Die-cast aluminumADC12/≈65g	1
23	Shredding blades	SUS420/73.5X32X2/50-52HRC	2
24	shredding spacers	SUS304/71.4X14X1	2
25	Stainless steel shredding disc	SUS304/Φ182X6 T=0.8	1
26	Shredding disc base	Die-cast aluminumADC12/≈76g	1
27	Shredding knife comb (2 mm)	Components/73X21X14.2	2
28	Cross recessed self tapping screw	SUS304/ST4X14 Pointed tail	1
29	Food pusher	PP/≈18g	1
30	Slice drive shaft	SUS420/Φ22X81.8/40-45HRC	1
31	Motor sleeve	ABS/≈1.35g	1
32	Shell	Die-cast aluminum/ADC12/≈1445g	1
33	Spring buckle	Iron-plated nickel/Hole distance-33/HoleΦ4.2	2
34	Stainless steel round head cross machine thread	SUS304/M4X10	10
35	Rocker switch	KCD2 ordinary waterproof rocker switch	1
36	Chrysanthemum	Iron-plated white zinc/M4	1
37	Round head cross machine thread M4*10 (with flat plate and elastic)	Iron-plated white zinc/ M4X10(with flat plate and elastic)	1
38	Micro switch fixing box	ABS/≈26.4g	1
39	Micro switch spring	SUS304; Φ0.5mm×Φ5.3mm×11N×21mm	1
40	Micro switch push rod	ABS/≈4.85g	1
41	Micro switch assembly	Two short legs/With 2 leads	1

No.	Name	Material/Spec	Qty
42	Micro switch fixed cover	ABS/≈9.6g	1
43	Round head cross self tapping screw	Iron-plated white zinc/ST3X10	3
44	Oil seal	12X22X5/Material: F7502+SPCC+65Mn	1
45	Motor front anti-vibration pad	Silicone: hardness 45-50° /Φ59X10.8/≈11g	1
46	Motor	DC: Model:GFY001-200	1
47	Motor anti-vibration pad	Silicone: hardness 45-50° /Φ83X11.8/≈21.4g	1
48	Rectifier plate fixing box	ABS/≈17.6g	1
49	Rectifier	47X25X1.6/4P187 Male terminal	1
50	Power cord	3-wire plug/3×0.75mm²	1
51	Bottom cover	ABS/≈110g	1
52	Rubber feet	Silicone/Black/Shaw55±5/1.5g	4

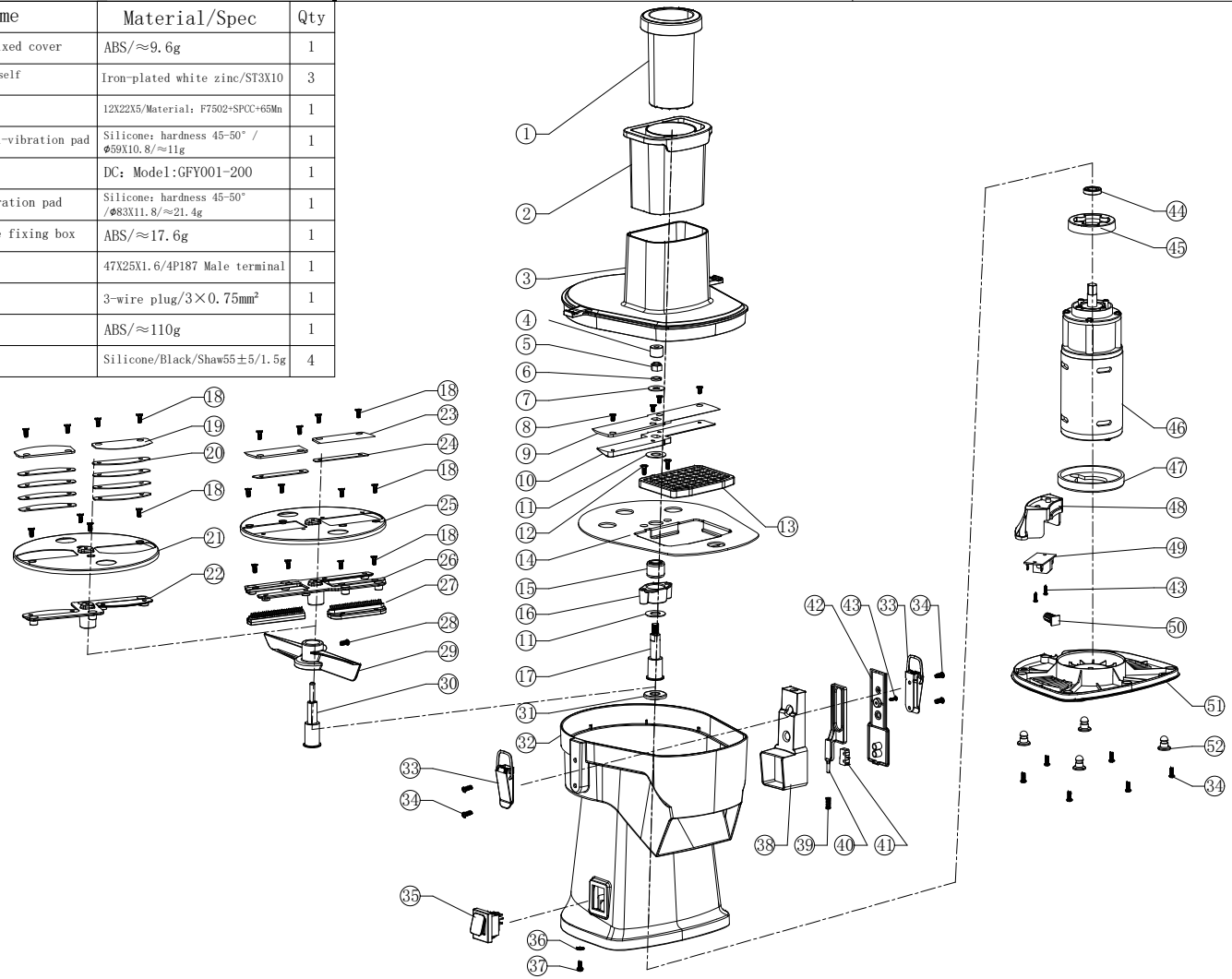

Foshan Gongjiang Electric Appliance Technology Co.,Ltd.

Model No.: GJ817

Form No.